CAD FILE:

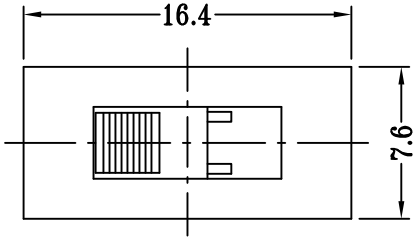

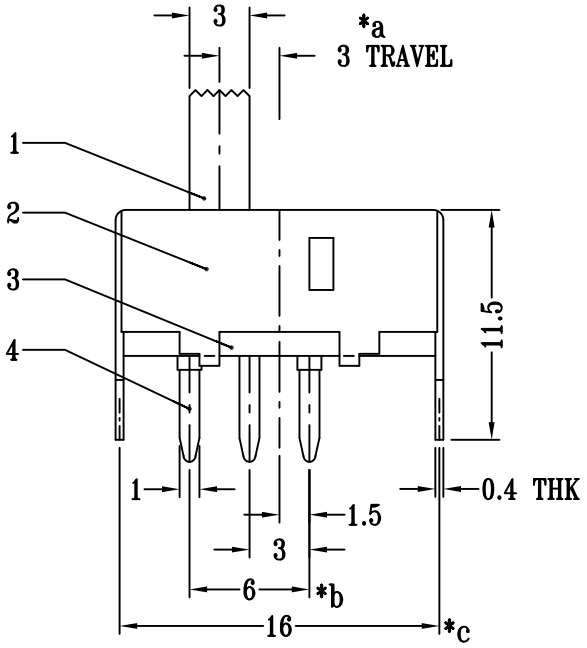

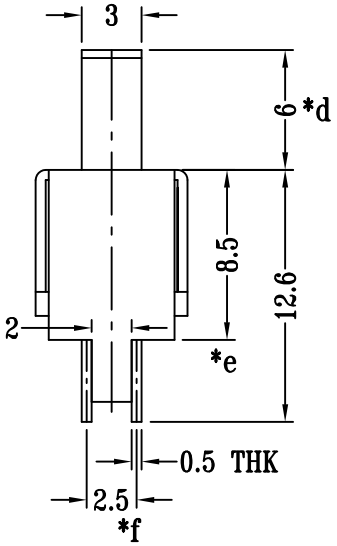

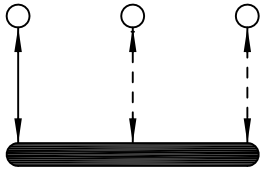

SCHEMATIC (SHORTING)

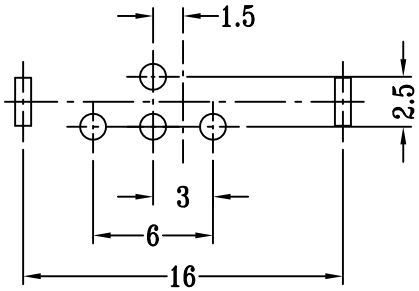

P.C.B LAYOUT
BOTTOM VIEW

注： "*"表示关键尺寸(6个).

NO.	PARTS	MATERIALS	Q'TY	FINISH
8				
7	STEEL BALL	STEEL	2	NATURAL
6	SPRING	STEEL WIRE	2	NATURAL
5	CONTACT	BRASS STRIP	1	Ag PLATED
4	TERMINAL	BRASS STRIP	4	Ag PLATED
3	BASE	PHENOLIC RESIN	1	BLACK
2	FRAME	STEEL STRIP	1	Ni PLATED
1	KNOB	POM	1	BLACK

TOLERANCE UNLESS SPECIFIED
WITHIN 1.5mm : ±0.1mm
OVER 1.5mm : ±0.2mm

ISSUE	DATE	DESCRIPTIONS OF REVISION	APPD.
A	2019-11-20	初 版	卢 业 创

TITLE : VERTICAL SLIDE SWITCH
MODEL: SS13F03G6
UNIT : mm
SCALE: 5:2
DRWG NO.: HQ-DR-SS13F03G6-00

DWN.	余 丽 珍	2019-11-20
CHK'D	卢 业 创	2019-11-20
APPD.		

深圳市创粤科技有限公司